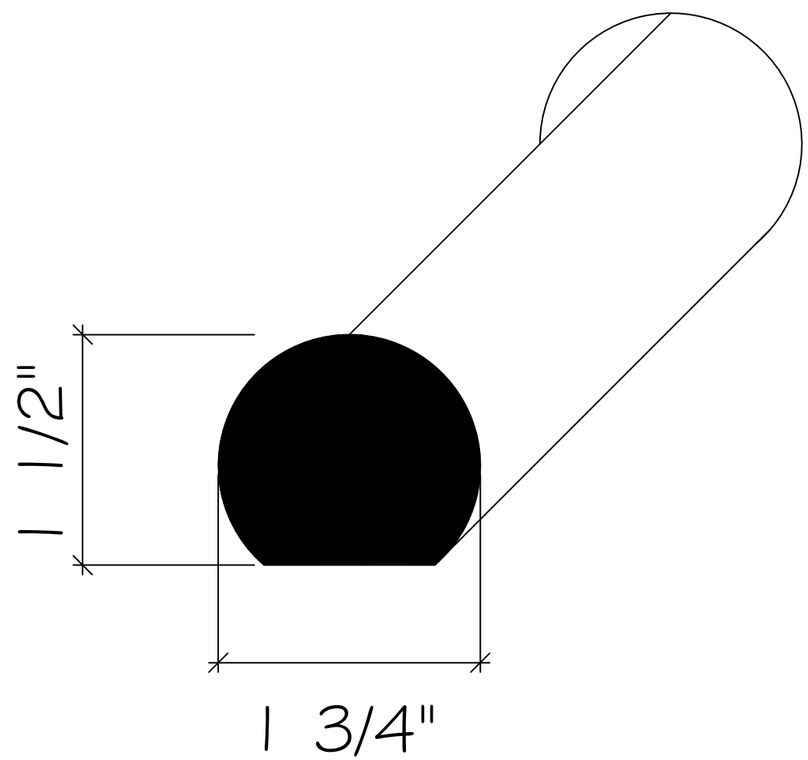

LBW #2-1 OO